UNIVERSITY OF MISKOLC

FACULTY OF
EARTH AND ENVIRONMENTAL
SCIENCES AND ENGINEERING

STRUCTURAL GEOLOGY

Petroleum Geoengineering MSc course

2026/27 1. Semester

MFFTT710004

COURSE COMMUNICATION FOLDER

University of Miskolc
Faculty of Earth and Environmental Sciences and Engineering
Institute of Mineral Exploration Geology

Course datasheet

Course Title: Structural geology	**Credits: 3**

Type (lec. / sem. / lab. / consult.) and Number of Contact Hours per Week: **lec. 1, sem. 2**

Neptun code: MFFTT10004

Type of Assessment (exam. / pr. mark. / other): **pr. mark**

Exercise: solving a construction problem in connection with a case study, using the tools and software introduced during the course.

Grading Limits:
>80%: excellent,
70-79.9%: good,
60-69.9%: medium,
50-59.9%: satisfactory,
<50%: unsatisfactory.

Position in Curriculum (which semester): **first**

Pre-requisites *(if any)*:

Course Description:

Acquired store of learning:
Study goals: The course provides a background in the fundamentals of structural geology in the context of petroleum exploration and production. It introduces the methods of interpreting structural observations and determining the 3-D distribution of the lithological units, the physical properties controlling the development of fractures, folds and other structural features. The course also introduces the students to building up, constructing and analysing spatial models.
Course content:Theoretical backgrounds: basic terms of structural geology and tectonics. Techniques of data acquisition, recording and visualization. Stress and strain, deformation mechanisms, rheological models. Brittle and ductile features, their style and origin. Syngenetic structures and their role in further structural evolution. Plate tectonics and large-scale structures. Characteristics of tectonic regimes. Practical exercises: use of tools to measure, demonstrate and analyze the structural data. Basics for constructing maps and cross sections.
Education method: Lectures with presentation slides, construction and calculation exercises on sheets and with computer.
Competencies to evolve:
T1, T4, T5, T6, T8, T11, T12, K5, K7, K9

The 3-5 most important compulsory, or recommended **literature** (textbook, book) **resources**:

- Richard H. Groshong, Jr.: 3-D Structural Geology. A Practical Guide to Quantitative Surface and Subsurface Map Interpretation. *Springer Verlag, Berlin, 2006*
- Ramsay, J. G. & Huber, M. I: The techniques of modern structural geology. Vol. 1: Strain Analysis. *Academic Press, London, 1983*, 1-308 p.
- Ramsay, J. G. & Huber, M. I: The techniques of modern structural geology. Vol. 2: Folds and Fractures. *Academic Press, London, 1987*, 309-700 p.
- Ramsay, J. G. & Lisle, R. J: The techniques of modern structural geology. Vol. 3: Applications of continuum mechanics in structural geology. *Academic Press, London, 2000*, 701-1062 p.
- Twiss, R. J. & Moores, E. M: Structural Geology. *Freeman & Co., New York, 1992*, 532 p.
- Twiss, R. J. & Moores, E. M: Tectonics. *Freeman & Co., New York, 1995*, 415 p.

Responsible Instructor (*name, position, scientific degree*)**:**

Norbert Németh Dr., associate professor, PhD

Syllabus of the semester

Wednesday, 8:00 – 11:00

Date	Lecture	Practice
2026.09.09.	Basic terms; information on the interior of the Earth	use of geological maps; rules and geometrical basis of construction of cross sections
2026.09.16.	Structural features of the rocks, deformation, description of movements	construction of cross sections
2026.09.23.	Sport Day	
2026.09.30.	Stresses, mechanics	construction of cross sections
2026.10.07.	field exercise	
2026.10.14.	Rheology and failure envelopes	construction of cross sections
2026.10.21.	Professional Information Day	
2026.10.28.	Rector's Holiday	
2026.11.04.	Mechanisms and features of brittle deformation	construction of cross sections with drill logs
2026.11.11.	Mechanisms and features of ductile deformation	construction of cross sections with drill logs
2026.11.18.		construction exercises
2026.11.25.		construction exercises
2026.12.02.		construction exercises
2026.12.09.	*test paper*	

Sample for the test paper with answers

1. The continuous great circles on the stereogram represent bedding planes on a cylindrically folded bed, the dashed great circle represents the orientation of a regular set of joints in the same bed.

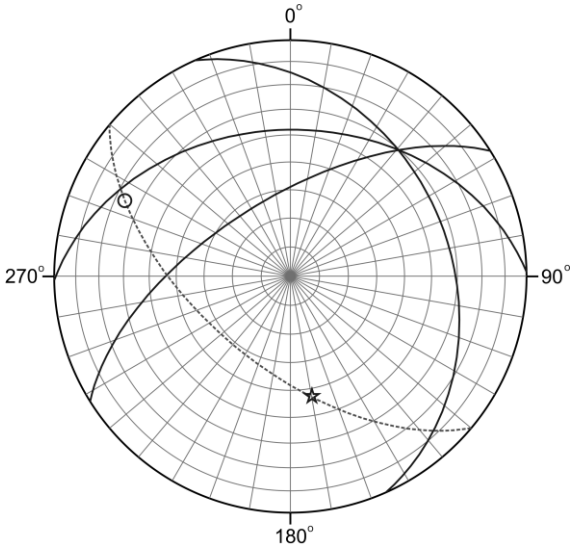

Equal area projection, lower hemisphere

a. What is the geological meaning of the line defined by the intersection of the great circles representing the bedding? **(1 p)**

fold axis

b. Using the polar grid, make a reading of the trend and the plunge of this intersection line in degrees! **(2 p)**

Trend: 40º
Plunge: 30º

c. The intersection and the lines indicated by a circle and a star define the three principal strain orientations of the deformation resulting the folds. What could have been the signs of these principal strains (extension: +, shortening: -)? **(1 p)**

Intersection: +
Circle: -
Star: +

2. The line sketch on the right is the profile view of a cylindrical fold train with alternating beds of lithologies 1 and 2.

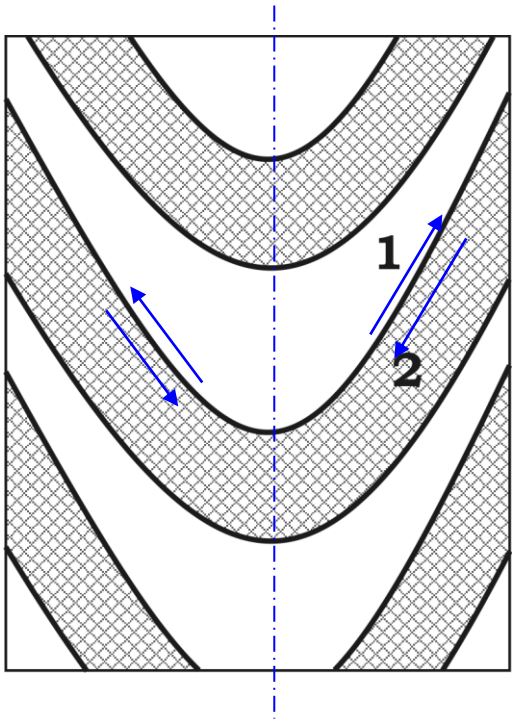

a. Indicate with arrow pairs (⇋ or ⇌) the shear sense (during folding) along bedding surfaces on both limbs of the fold! **(1 p)**
b. Indicate with a dash-dot line the axial trace! **(1 p)**
c. Classify the folds according to Ramsay! Put a ring around the correct class code! **(2 p)**

   bed 1 (unhatched): 1A 1B 1C (2) 3

   bed 2 (hatched): 1A 1B (1C) 2 3

d. How would you describe the competence relation of the beds 1 and 2 based on the fold style? Complete the sentence below! **(1 p)**

   Bed 2 is more competent than bed 1

3. Decide whether the following statements are correct or not! **(6 p)**

	true	***false***
Mylonite is a cataclastic rock formed in fault zones.		X
The maximum resolved shear stress on a plane depends on the differential stress and on the orientation of the plane with respect to the principal stress axes.	X	
Normal faults are formed when one of the horizontal principal stresses is tensile.		X
Hydraulic fracturing is made by decreasing the effective stresses and increasing the neutral stresses.	X	
Schistosity is a foliation in coarse grained crystalline rocks.	X	
Crosscutting a reverse fault in a horizontally bedded succession by a vertical borehole will cause omission of some beds in the log.		X

4. Choose the factors from the lists necessary to the definition of the following terms! Be careful, there can be more than one choices which are needed, and some things may occur but are not essential in general! **(5 p)**

a. Ductile deformation

fold formation	
irreversible deformation	X
high temperature	
no loss of cohesion	X

b. Passive shear folding

initially planar structures, layering	X
deformation mechanism allowing ductile flow	X
shear along bedding planes	
continuous cleavage	

c. Principal stress

three mutually perpendicular vectors	X
compressive normal stresses	
vectors normal to planes of no shear stress	X
diameter of the Mohr circle	

d. Tectonic window

topographic depression	
outcrop of older rocks thrust on younger rocks	
outcrop of autochtonous rocks surrounded by allochtonous rocks	X
nappe thrust	X

e. Simple shear

plane strain	X
homogeneous strain	X
volume change	
constrictional strain	

5. The sketch on the right shows the generalized profile of an oceanic subduction zone.

a. Give the correct letter to each item of the legends! **(2 p)**

back-arc basin	E
forearc basin	C
island arc	D
oceanic trench	B
passive continental margin	A

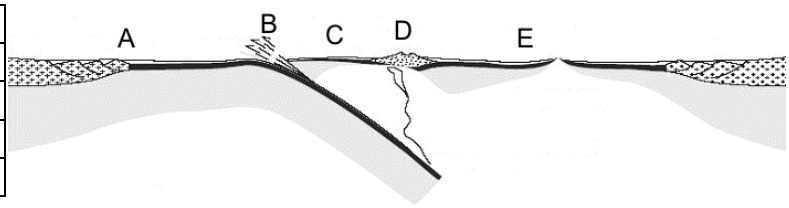

b. Which metamorphic facies relates to the subducting plate? **(1 p)**

blueschist

6. The Mohr diagram represents the stress state at the boundary of two different lithologies, sandstone and marl. (Stress quantities are not indicated, but the scale is linear.) Dashed line is a Coulomb envelope for the sandstone, dotted line for the marl.

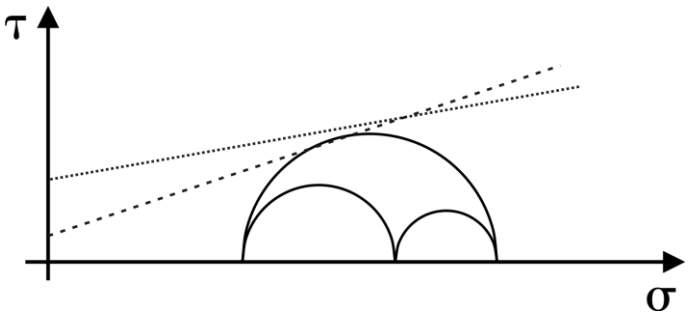

a. Which of the rocks will fracture in this situation? Underline the correct answer! **(1 p)**

sandstone *marl* *both rocks* *none of the rocks*

b. Which type of structures is expected to form? Underline the correct answer! **(1 p)**

joint sets *ductile shear zones* *faults* *veins*

c. Which changes in the stress state could lead to further brittle deformation in this case? Underline the correct answers (multiple choice)! **(2 p)**

increase of σ_1 with constant σ_2 and σ_3

increase of σ_2 with constant σ_1 and σ_3

increase of σ_3 with constant σ_1 and σ_2

decrease of σ_1 with constant σ_2 and σ_3

decrease of σ_2 with constant σ_1 and σ_3

decrease of σ_3 with constant σ_1 and σ_2

7. Answer the following questions and tasks using the geological sketch map below!

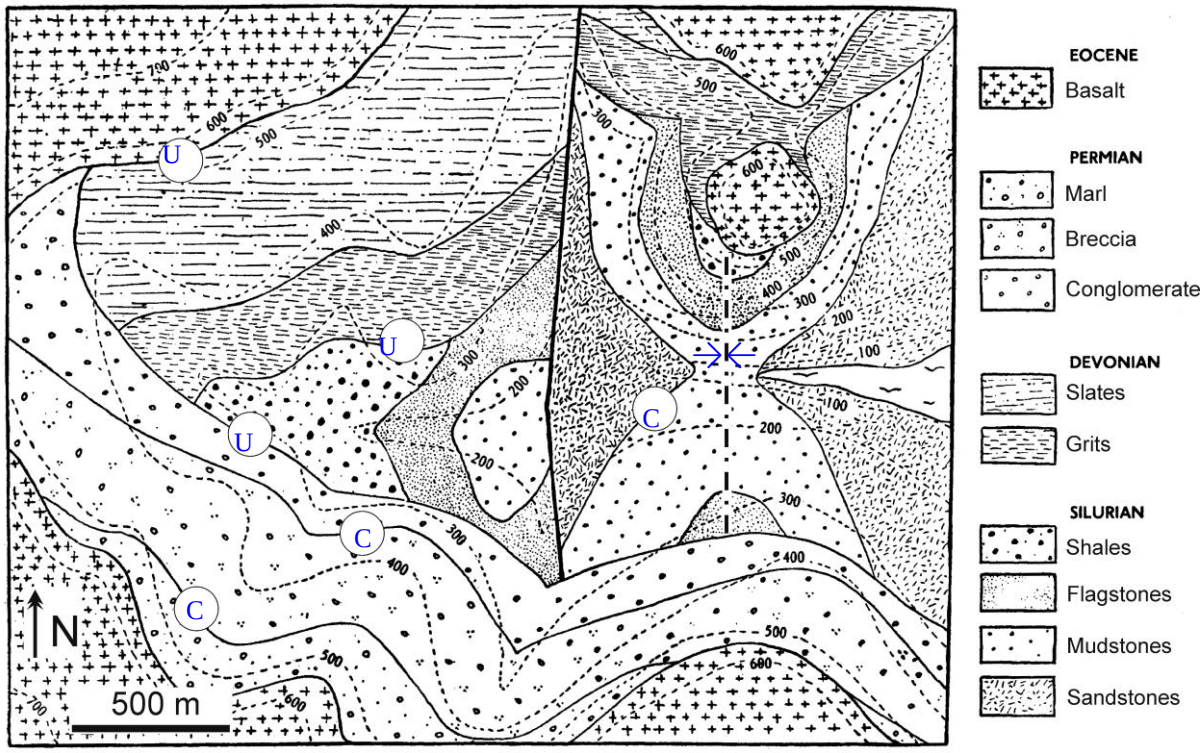

a. The bold line is the trace of a steeply dipping fault.

Which is the downthrown side of the fault? Underline the correct answer! **(1 p)**

east side *west side*

Give the age of the faulting with the possible accuracy! **(1 p)**

End of Devonian – start of Permian

b. The circles are for identifying some of the contacts of the formations. Indicate the conform bedding contacts with a letter **C** and the unconformities with a letter **U** written in the circles! **(2 p)**

c. The dash-dot line marks the hinge zone of an upright fold. Is it a syncline or an anticline? Apply the correct signs (→← or ↔) on the line to indicate it! **(1 p)**

d. Give an estimation of the dip angle of the base of the Eocene basalt cover! **(1 p)**

horizontal

8. Complete the sentences with the appropriate words! **(7 p)**

If a cleavage comprises cleavage domains and microlithons without preferred orientation it is called a …(1a)… cleavage; if it penetrates the rock completely, it is a …(1b)… cleavage.

The …(2)… can be calculated as the ratio of the actual temperature and the melting point.

In the Newtonian viscous model the increase of the stresses will cause the increase of the …(3)…

The …(4)… can be described as a sum of translation and rotation, without any internal strain.

The …(5a)… is a mineral coating formed on fault planes, where …(5b)… may indicate the direction of displacement.

The orientation of a plane can be defined using three mutually perpendicular lines: the …(6a)…, the …(6b)… and the plane normal.

…(7)… are parts of a competent layer dissected by layer-parallel extension, typical in fold limbs.

1a: spaced_____

1b: continuous_____

2: homologous temperature_____

3: speed of the deformation_____

4: rigid body movement_____

5a: slickenside_____

5b: slickenlines_____

6a: strike line_____

6b: dip line_____

7: boudins_____

Maximum: 40 points

points	grade
34≤	5
28≤	4
22≤	3
16≤	2
less than 16	1